FLOW & Installation set

A: 125S FLOW
B: 160S FLOW
C: ECo110S FLOW,
ECo125S FLOW,
ECo160S FLOW

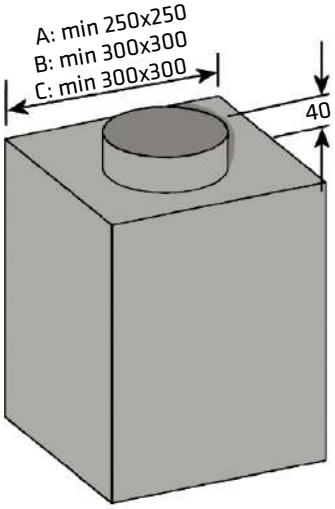

A:

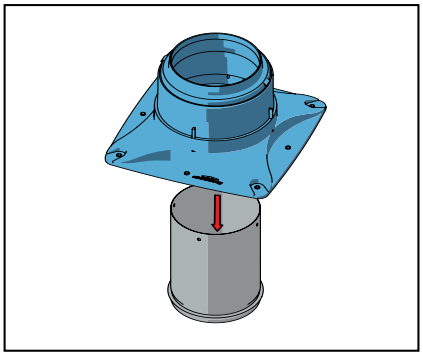

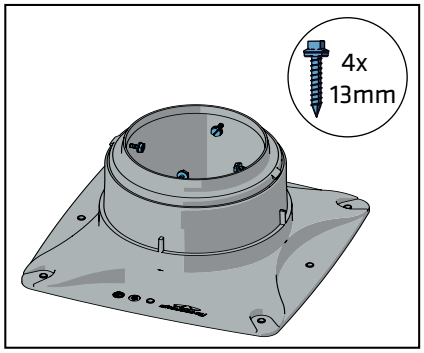

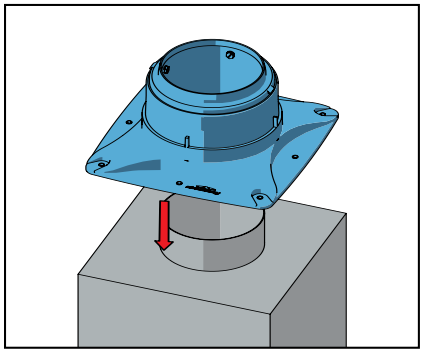

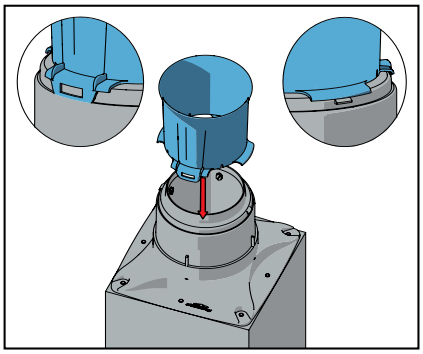

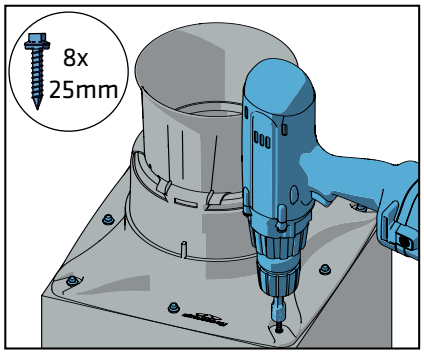

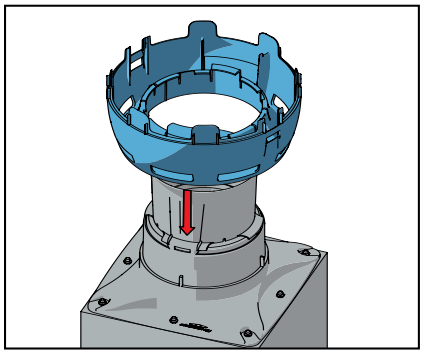

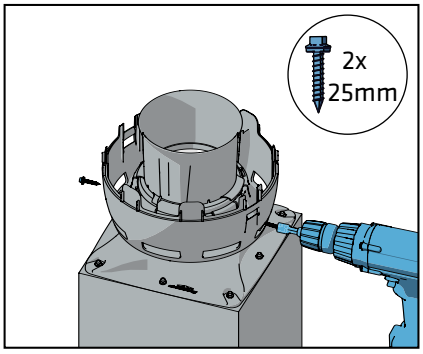

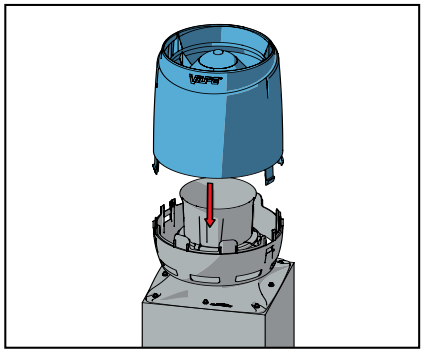

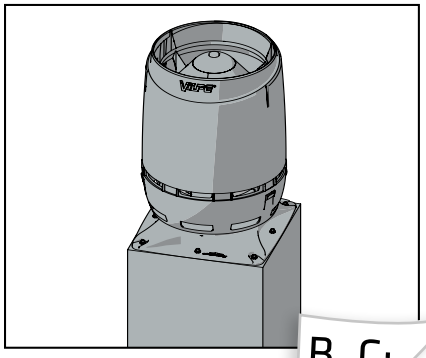

B, C:

T80102_B

FLOW & Installation set

B:

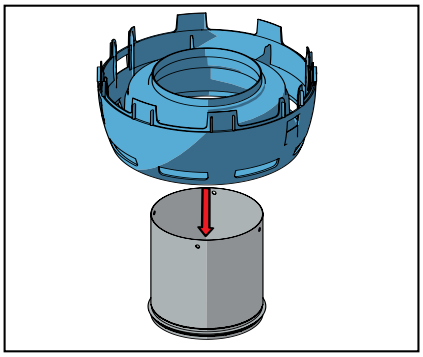

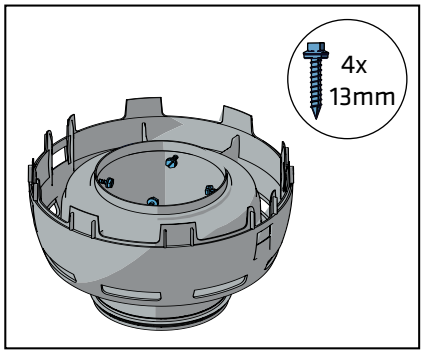

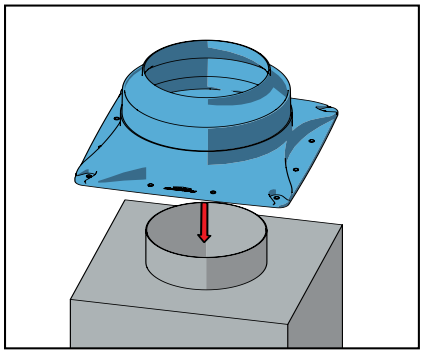

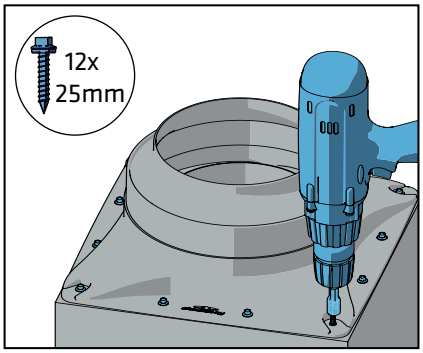

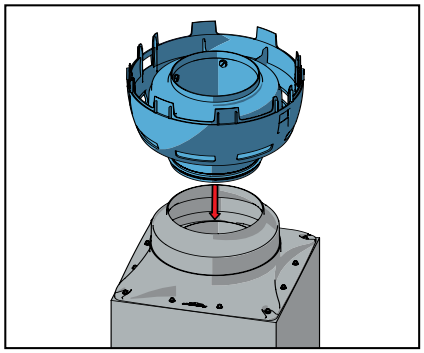

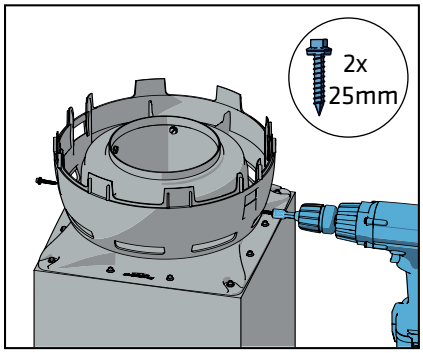

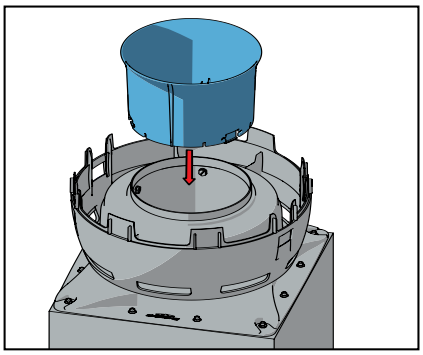

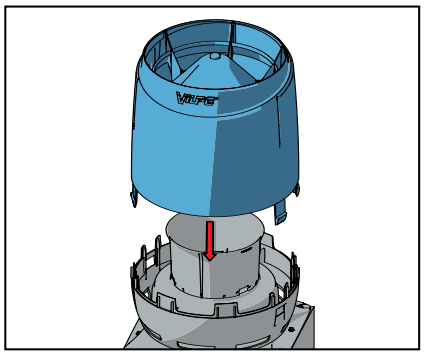

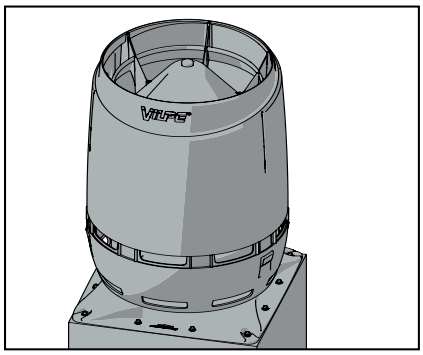

C:

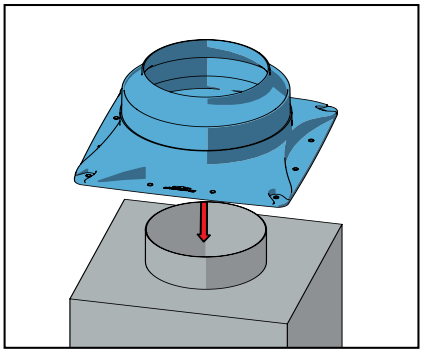

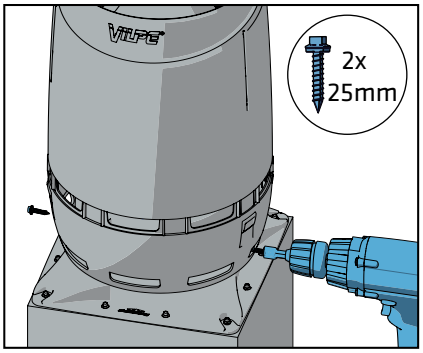

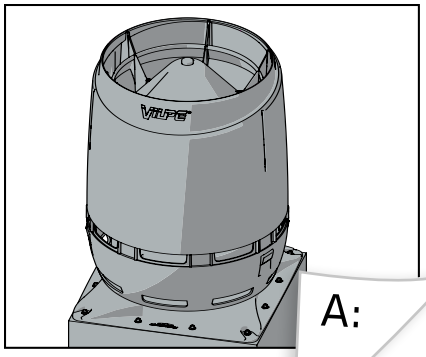

A:

T80102_B